LED-10X2 Monitor

KEY FEATURES

- Aspect ratio 4:3 and 16:9 is switachable.
- Excellent contrast ratio and performance.
- Metal case made with rack mount attached.
- High Saturation.
- Environmentally Friendly. Power saving.
- Professional design for CCTV use.
- OSD with multi-languages operate easily.
- Remote control available.
- BNC (Video) Input / output
- Video signal looping function
- VGA Input
- HDMI Input
- Built-in Speaker.
- Keylock function is available.
- Video mode with under scan function.
- NTSC / PAL (Auto Detection)
- Vesa standard holes (75 x 75 mm).
- USB update firmware purpose (Media function is an optional function)
- Special design for 2 x HDMI

HDMI 1: P C connection

HDMI 2 : DVR / NVR / Video connection

LED-10X2 Monitor

Specifications

Display	
Panel size.	9.7 "
Resolution	1024 x 768
Brightness	400 cd / m2
Pixel Pitch	0.192(H) x 0.192(V) mm
Color	262K colors
Back light	LED
Contrast ratio	10,000 : 1
Aspect ratio	4:3
View Angle (H/V)	178 / 178
Response time	4 ms
System	NTSC/PAL (Auto Detection)
Interface (One screen)	
BNC (Video) Input	1
BNC (Video) Input	1
VGA Input	1
HDMI Input	2
USB Input	1
Audio (Per display)	
Speaker input	Yes (1.5W x 2)
PC Audio Input	1
Video Audio Input (RCAx1)	2
Special features	
3D Comb Filter	Yes
3D De-Interlace	Yes
Media function	Yes
Key lock function	Yes
Remote control	Yes
OSD Languages	English/Japanese/Russian/French/German/Spanish/Italian/Portuguese/Dutch
Dimension	
Monitor Size (WxHxDmm)	446 x 221 x 47 mm
Weight of monitor(approx.)	3.10 KGS
Bracket	
Vesa size.	75mm x 75 mm
Wall mount	Optional
Ceiling mount	Optional
Carry bag	Optional
Power	
Voltage AC100 ～ 240 V	DC12V (AC100~240 【 50 / 60 】)
Power consumption	30W (Max.)
Battery	Optional
Certifications	
Compliance	FCC-DOC, CE, ROHS

（The specifications above is subject to change without any notice.）

LED-10X2 Monitor

Interface

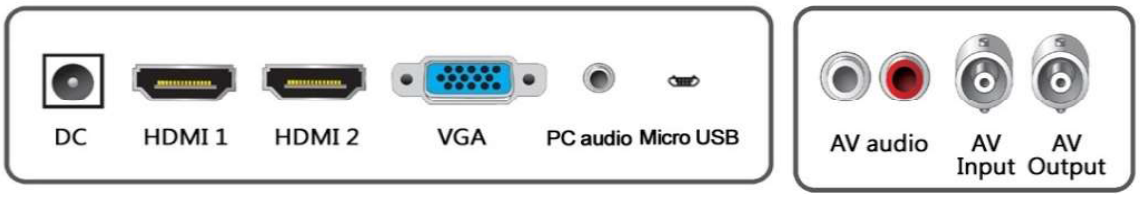
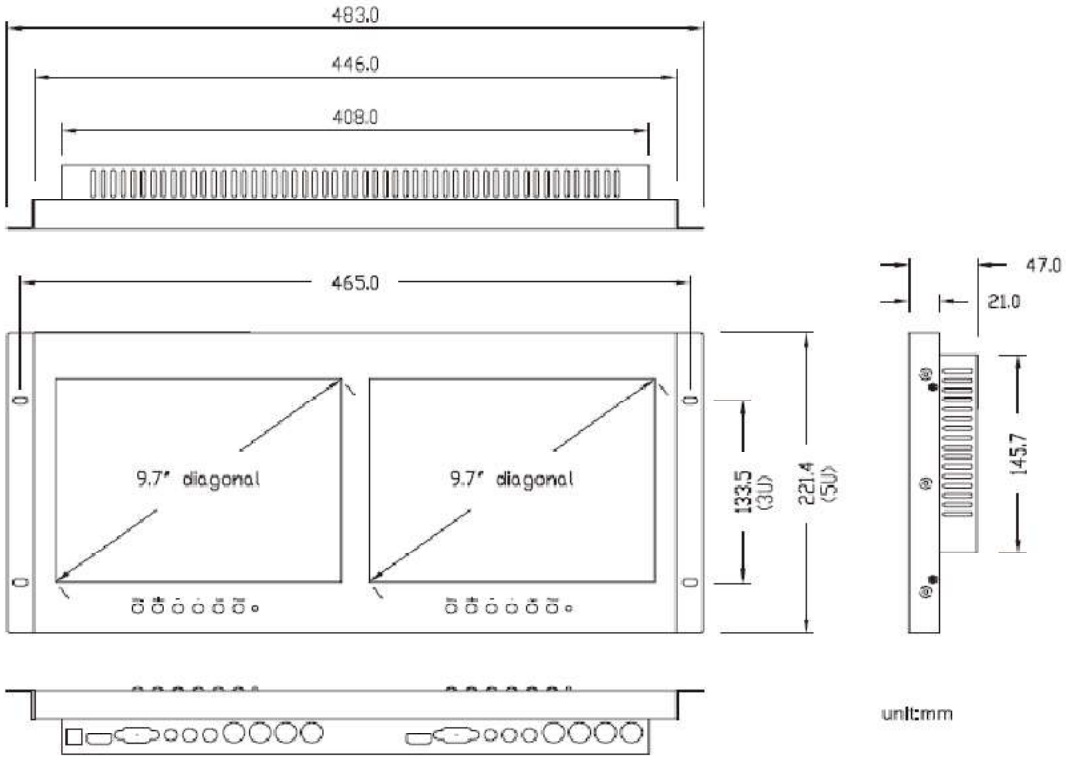
Dimension (Unit: mm)